# Build a Williamsburg Box

## Free Plans to Build a Williamsburg Box

Here is another great piece of storage for the kiddos' treasures, for book or magazines, yarn, etc. The free plans to build a Williamsburg box are also perfect as shelf decoration or as a footstool! Paint a number, letter, or phrase on the front to reflect your individual style!

## Materials:

- 1-1/4″ brad nails
- 2 – 1″ x 1″ angle iron at 4′ each
- 1/2″ pan head or washer head screws
- One set of non-mortise hinges

- Paint and stencil, if desired
- Finishing supplies

## Lumber:

- 1 quarter sheet of 3/4″ plywood (PureBond plywood would be perfect!)

## Cut List:

- 2 – 3/4″ plywood at 10-1/2″ x 10-1/2″ – Top & Bottom
- 2 – 3/4″ plywood at 10-1/2″ x 12″ – Sides
- 2 – 3/4″ plywood at 12″ x 12″ – Front & Back

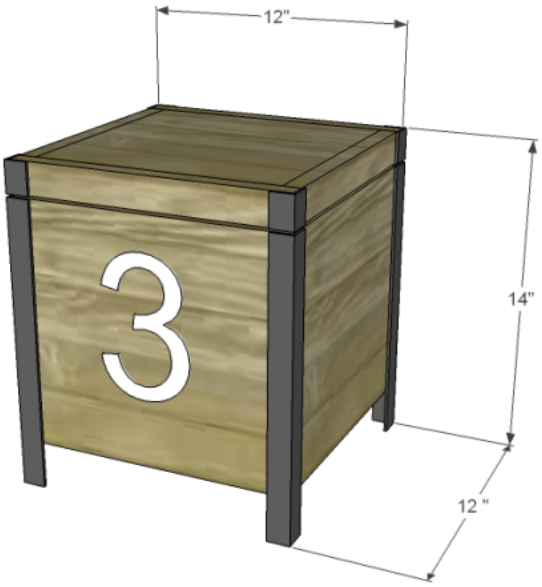


*Click on the drawings for a larger view!*

## Step One

Cut the pieces for the top, bottom, and sides. Secure the sides to the top and bottom as shown using glue and 1-1/4″ brad nails.

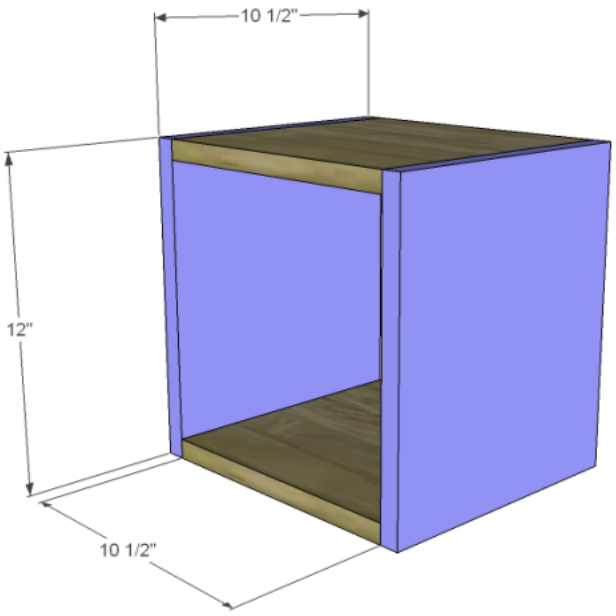


**Step Two**

Cut the pieces for the front and back. Secure as shown using glue and 1-1/4″ brad nails.

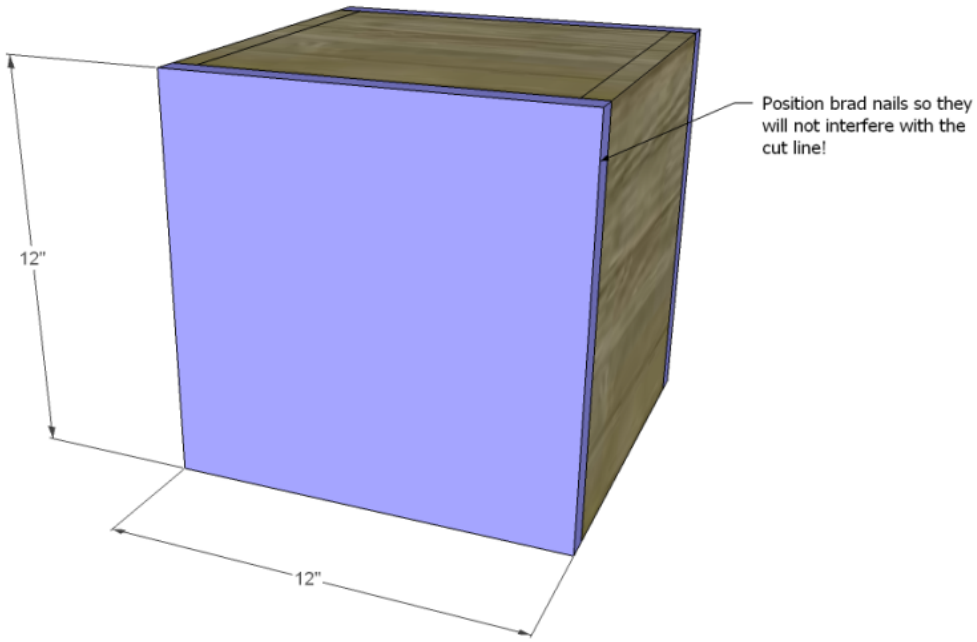


**Step Three**

To separate the top from the box – Draw a line 1-3/8″ down from the top of the box all the way around. Draw an “X” over the line on one side – this will help you line up the top with the box after they are separated. Cut along the line with a

jigsaw. A series of 1/8″ holes may have to be drilled just below the line (on the box side) at one corner in order to start cutting with a jigsaw.

**Step Four**

Use a hacksaw to cut the angle pieces to length. Use a file to smooth the sharp edges and pre-drill holes along the angles. Attach the pieces to the box as shown using the pan head or washer head screws. Install the hinges according to the manufacturer’s instructions.

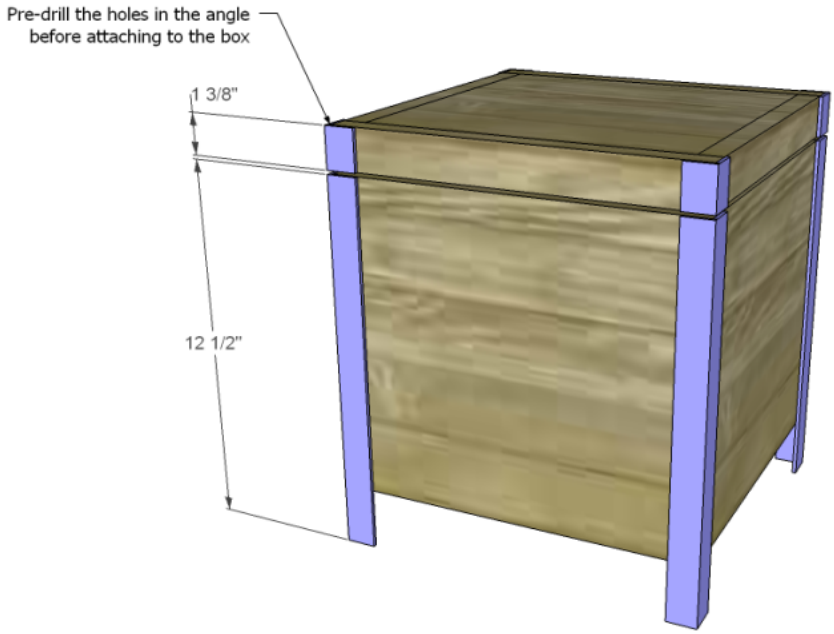


Finish and stencil the front as desired!

The free plans to build a Williamsburg box are very simple to sonstruct. Several could be built over the course of a weekend! Share your fabulous work with me… Send photos to cher {at} designsbystudioc {dot} com or designsbystudioc {at} gmail {dot} com. I would love to feature your build on DbSC!